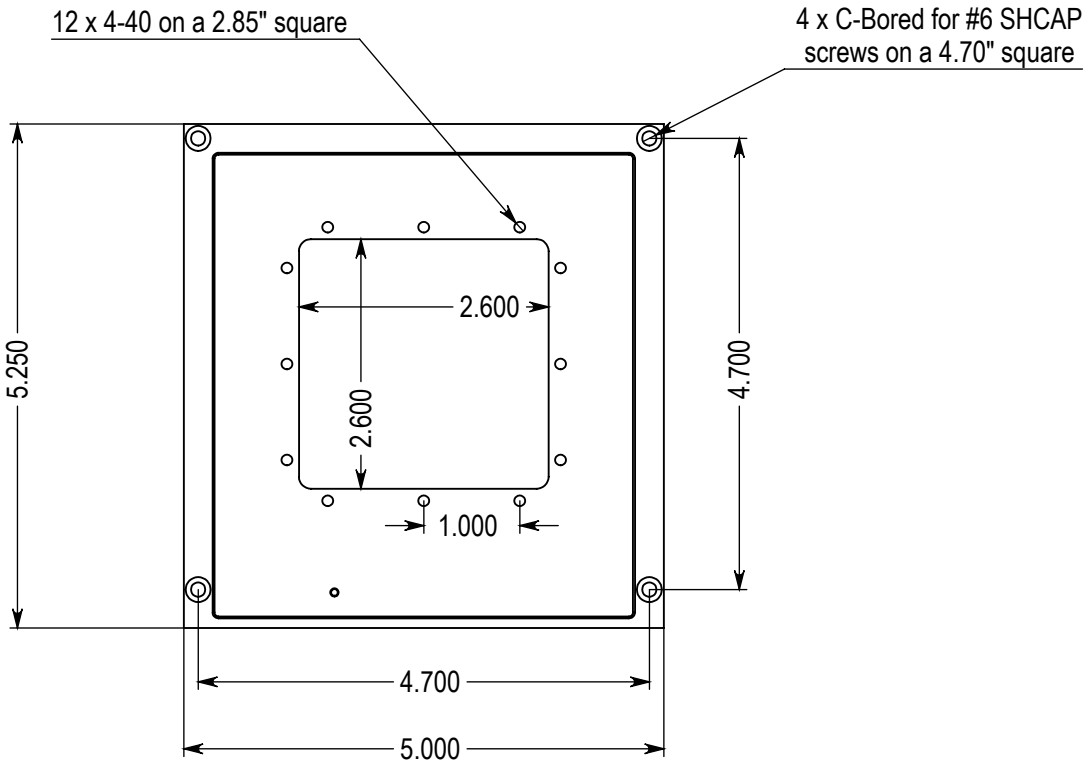

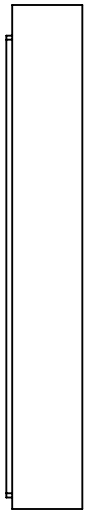

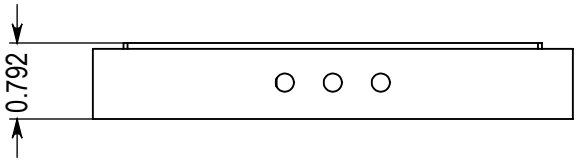

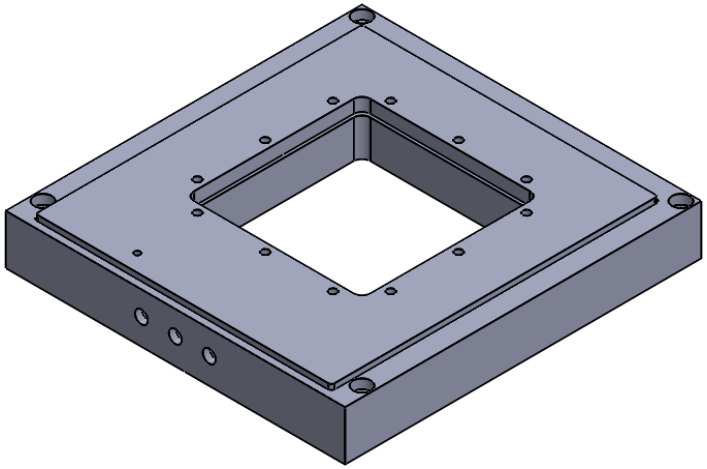

MAD CITY LABS INC.

Nano-ZS Series

Dimensions are in inches

Drawing No.
NZS1.14.A

DRAWING IS TO BE USED AS A GUIDE ONLY. DIMENSIONS ARE SUBJECT TO CHANGE WITHOUT NOTICE. THE INFORMATION CONTAINED IN THIS DRAWING IS THE SOLE PROPERTY OF MAD CITY LABS. ANY REPRODUCTION IN PART OR AS A WHOLE IS PROHIBITED.