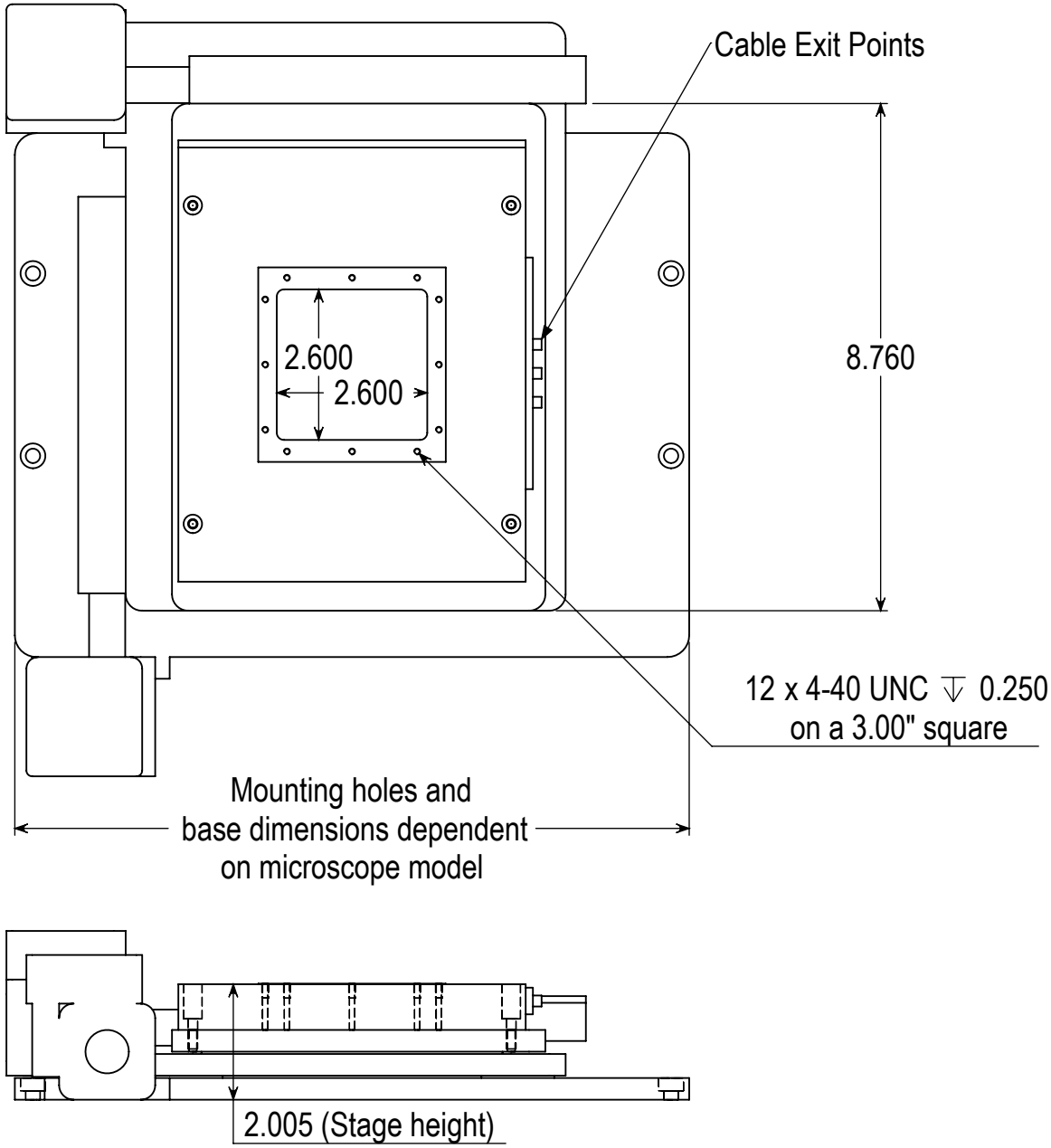

MAD CITY LABS INC.

Nano-View™ 100/200-3

Dimensions are in INCHES

Drawing No.
NV3.07.A

DRAWING IS TO BE USED AS A GUIDE ONLY. DIMENSIONS ARE SUBJECT TO CHANGE WITHOUT NOTICE. THE INFORMATION CONTAINED IN THIS DRAWING IS THE SOLE PROPERTY OF MAD CITY LABS. ANY REPRODUCTION IN PART OR AS A WHOLE IS PROHIBITED.